enelsan
We Measure

RADAR LEVEL
TRANSMITTER

ETRANS – R01WP
Datasheet

Precise Measurement,
Ultimate Control

www.enelsan.com

Document 00000050

Radar Level Transmitter
MODEL R01WP

Application Areas

Water and Wastewater Management
Environmental Monitoring & Hydrology
Civil Infrastructure & Municipal Services
Agriculture
Open Channels
Rainwater Basins
Dams and Reservoirs
Simple Industrial Liquid Storage

Features

- Measured Product: Water / Liquids
- Measurement Range Options: 10m, 20m, 30m, 50m
- Process Connection: G Threaded or Flange
- Cable Entry: M12 x 1.5 (F)
- Electronics / Output: Two-wire 4...20mA, MODBUS, or Wireless Bluetooth

Description

The Etrans-R01WP is a high-performance FMCW radar level transmitter designed for non-contact measurement in a variety of simple liquid applications. Operating within the 77GHz to 81GHz frequency range, this sensor provides exceptional accuracy of ± 2mm for liquids and features a narrow beam angle of ± 3.5°for precise targeting. Its robust construction, featuring a stainless steel body and an IP67 protection rating, ensures reliable operation in demanding environments with process temperatures ranging from -20°C to 60°C

This transmitter is specifically optimized for open channel applications, making it an ideal choice for water and wastewater management, rainwater basins, and dam level monitoring. It offers versatile integration options through signal outputs such as 4-20mA, RS485, and Bluetooth, allowing for easy configuration via a dedicated smartphone application. With measurement range options extending up to 50 meters and flexible process connections including G-threads and flanges, the Etrans-R800WP provides a scalable solution for modern infrastructure and industrial liquid sensing needs.

Structure

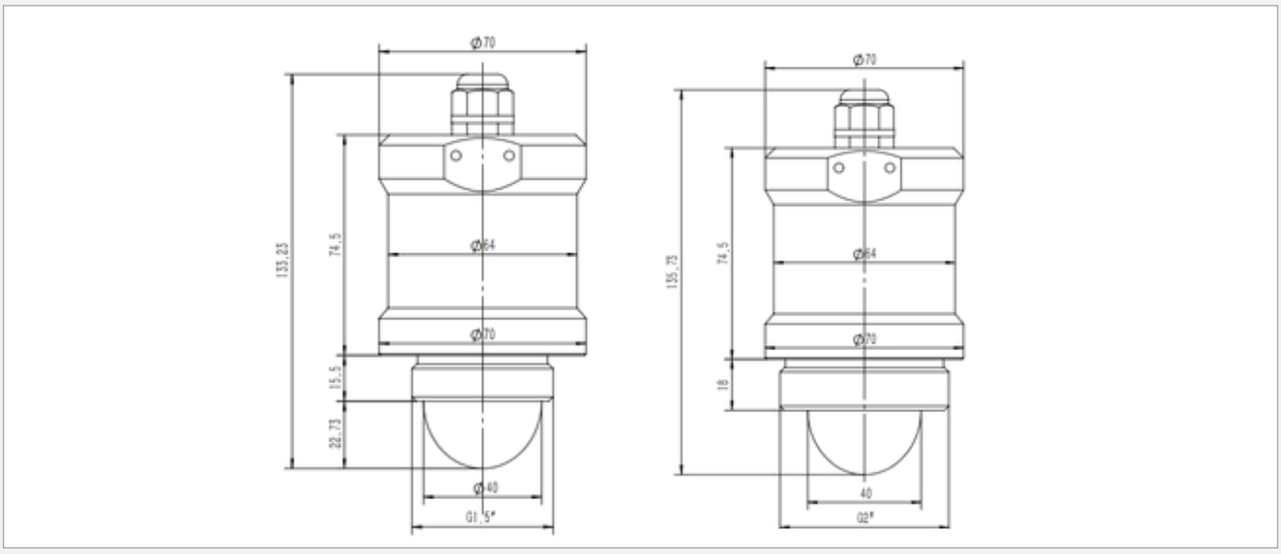

TECHNICAL FEATURES

Operating Frequency	77GHz - 81GHz
Measurement Range	10m, 20m, 30m, 50m
Measurement Accuracy	±2 mm (for liquids)
Beam Angle	±3.5°
Housing Material	Stainless Steel
Process Connection	G1 1/2" and G2" Male Thread; DIN and ANSI flange options upon request
Process Temperature	-20°C to 60°C
Process Pressure	Normal atmospheric pressure
Signal Output	4-20mA / RS485 / Bluetooth
Supply Voltage	Two-wire DC 24V (22V ~30V)
Protection Class	IP67
Dimensions	74mm x 97mm
Weight	1kg (depending on connection type)
Communication	Bluetooth APP (RadarMe available on App Store / Google Play)

Contact us

Enelsan Istanbul Office Address
Şerifali, Barbaros Cd. No: 60, 34775 Ümraniye/İstanbul

Enelsan Factory 1 Address
Çerkeşli OSB Mahallesi İmes 4 Bulvarı No: 11 Dilovası/Kocaeli

Enelsan Factory 2 Address
Çerkeşli OSB Mahallesi İmes 14. Cadde No: 17 Dilovası/Kocaeli

Phone: +90 262 754 63 13
Fax: +90 262 754 93 93
sales@enelsan.com

Radar Level Transmitter
MODEL R01WP

Etrans-R01WP / ☐ - ☐ - ☐ - ☐ - ☐ - ☐

1 2 3 4 5 6

1 Measured Product

Water / Liquids	√	**WS**

2 Measurement Range

10 m	√	**10**
20 m		**20**
30 m		**30**
50 m		**50**

3 Process Connection

G '' Thread	√	**G**
Flange		**F**

4 Process temperature

-20...+60°C	√	**N**

5 Cable Entry

M12 x1.5 (F)	√	**M**

6 Electronic

Two-wire 4...20mA	√	**T**
MODBUS		**M**
Wireless Bluetooth		**B**