enelsan
We Measure

RADAR LEVEL
TRANSMITTER

ETRANS – R01we FMCW
Datasheet

Precise Measurement,
Ultimate Control

www.enelsan.com

Document 00000050

Radar Level Transmitter
MODEL R01we

enelsan
We Measure

Application Areas

Water and Wastewater Management
Environmental Monitoring & Hydrology
Civil Infrastructure & Municipal Services
Agriculture
Open Channels
Rainwater Basins
Dams and Reservoirs
Simple Industrial Liquid Storage

Features

- Measured Product: Liquids
- Measurement Range Options: 15 m
- Process Connection: G Threaded or Flange
- Cable Entry: M12 x 1.5 (F)
- Electronics / Output: Two-wire 4...20mA,/ MODBUS, or Wireless Bluetooth
  Four wire 4-20mA or RS485 (select one of)

Description

The Etrans-R01we is a high-performance FMCW radar level transmitter engineered for precise, non-contact level measurement in various industrial and environmental settings. Operating within the 77GHz-81GHz frequency range, this sensor delivers an exceptional accuracy of 2mm for liquids and offers a flexible measurement range of up to 30 meters. Constructed with a durable stainless steel body and rated with IP68 protection, it is designed to withstand demanding conditions while maintaining a compact size of 74mm x 97mm.

This versatile transmitter is particularly ideal for open channel applications, such as wastewater management, rain basins, and dam level monitoring, but is also highly effective for use in liquid tanks and containers. It supports a wide array of communication protocols, including 4-20mA, RS485 Modbus, HART, and Bluetooth, allowing for seamless integration and remote monitoring via a dedicated mobile app. With a broad operating temperature range of -40°C to 80°C and versatile process connections like G threads or optional flanges, the SK-R800WE provides a reliable solution for complex level sensing needs.

Structure

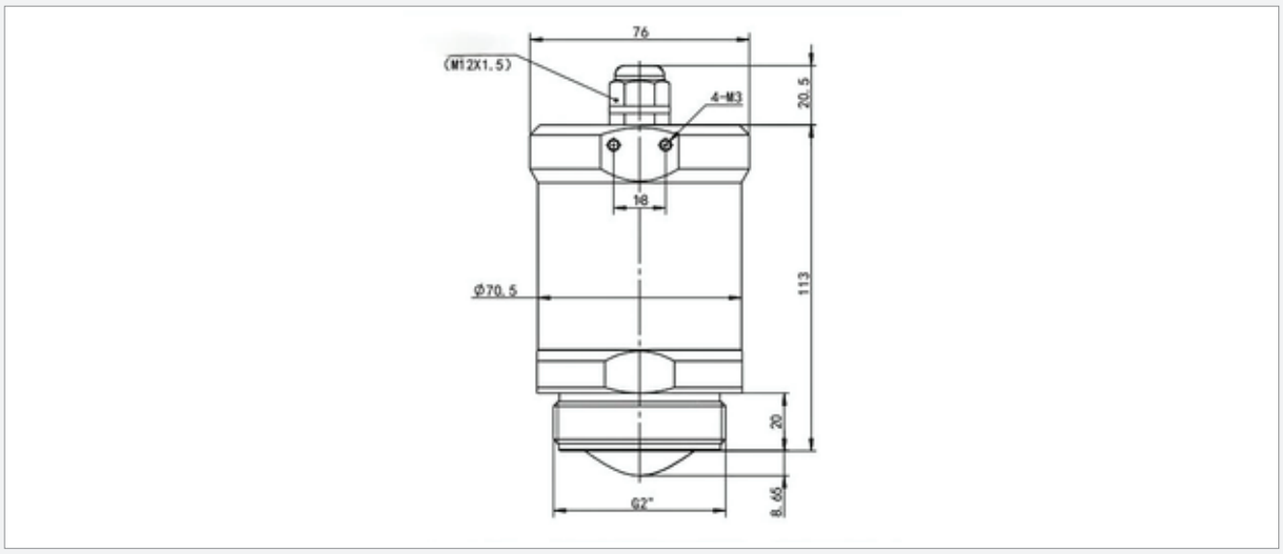

TECHNICAL FEATURES

Operating Frequency	77GHz - 81GHz
Measurement Range	30 M
Measurement Accuracy	±2 mm (for liquids)
Beam Angle	±3.5°
Material	Stainless Steel
Process Connection	Thread or Optional flange DN and ANSI (customized)
Process Temperature	-40°C to 80°C
Process Pressure	Normal atmospheric pressure
Signal output	4-20mA / RS485/ Bluetooth / HART
Protection Class	Two-wire DC 24V (22V~30V)
Power supply	IP68
Dimensions	74mm x 97mm
Weight	1,5 Kg (depends on the connection type)
Communication	Bluetooth APP

Contact us

Enelsan Istanbul Office Address
Şerifali, Barbaros Cd. No: 60, 34775 Ümraniye/İstanbul

Enelsan Factory 1 Address
Çerkeşli OSB Mahallesi İmes 4 Bulvarı No: 11 Dilovası/Kocaeli

Enelsan Factory 2 Address
Çerkeşli OSB Mahallesi İmes 14. Cadde No: 17 Dilovası/Kocaeli

Phone: +90 262 754 63 13
Fax: +90 262 754 93 93
sales@enelsan.com

Radar Level Transmitter
MODEL R01we

Etrans-R01we / ☐ - ☐ - ☐ - ☐ - ☐ - ☐ - ☐

❶ ❷ ❸ ❹ ❺ ❻ ❼

❶ Measured Product

Water / Liquids	√	WS

❷ Measurement Range

10 m	√	10
20 m		20
30 m		30

❸ Process Connection

G '' Thread	√	G
Flange		F

❹ Process temperature

-40...+80°C	√	N

❺ Cable Entry

M12 x1.5 (F)	√	M

❻ Electronic

Two-wire 4...20mA	√	T
MODBUS		M
Wireless Bluetooth		B

❼ Protection

IP 68	√	P